BetaBots Alpha

Student's Guide

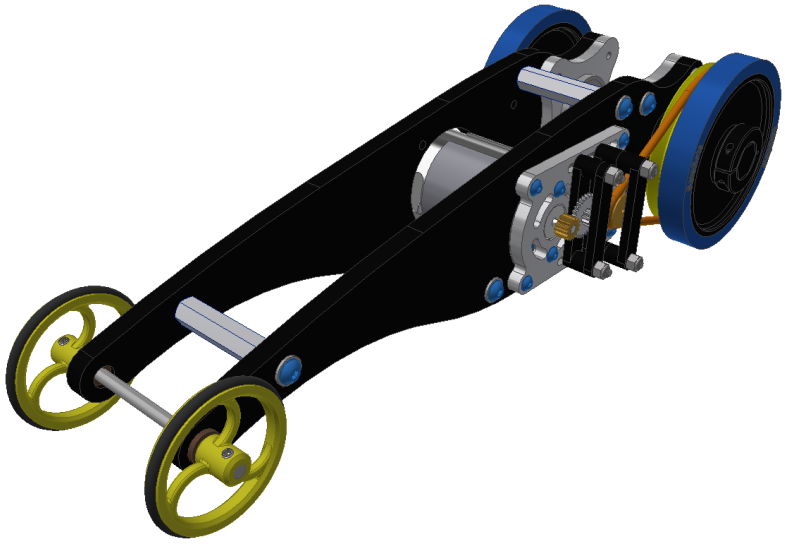

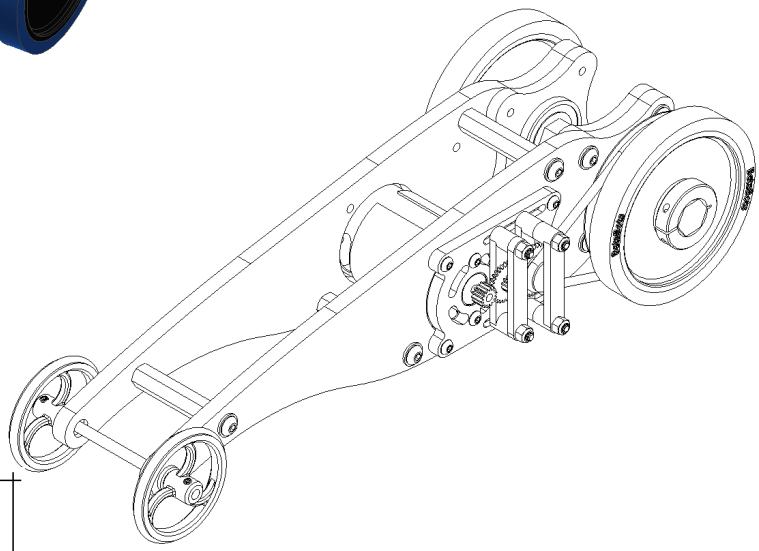

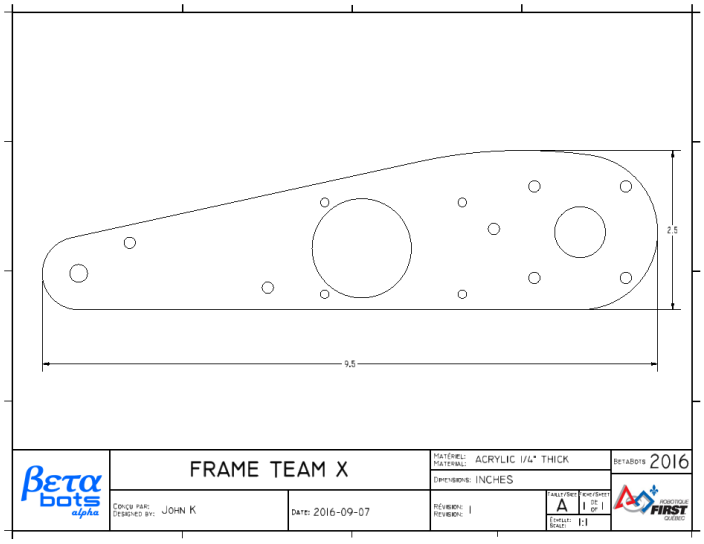

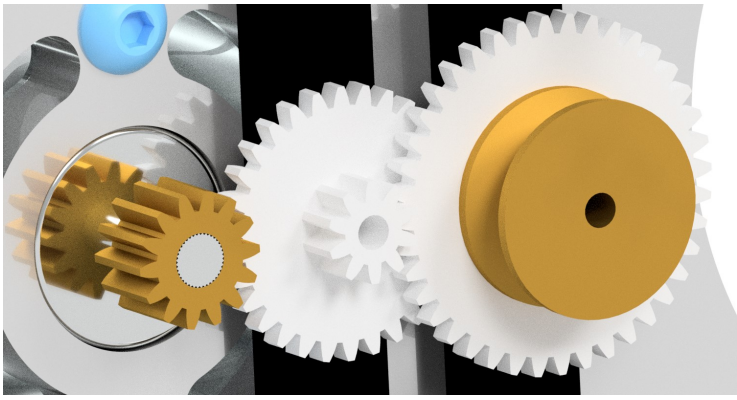

ROBOTIQUE FIRST QUÉBEC

robotiquefirstquebec.org

Kit Contents

βετα bots alpha

A BetaBots Alpha kit contains:

- 1 x BaneBots RS550 motor
- 1 x gearbox with assorted gears
- 2 x BaneBots wheels
- Urethane belt
- 2 x ½" hex bearings
- 1 x ½" hex shaft
- 2 x hex shaft collars
- 2 x ½" hex spacers
- 2 x 4mm bushings
- 1 x 4mm shaft
- 2 x O-rings
- 3 x M4 hex standoffs
- 2 x M3x3mm set screws
- 2 x M3x8mm button head screws
- 4 x M3x16mm button head screws
- 6 x M4x10mm button head screws
- 4 x M3 nyloc nuts
- 4 x M3 washers
- 6 x M4 washers

Parts to be designed:

- Front wheels
- Frame
- Rear pulley

Front Wheels

βετα bots alpha

The first component of the dragster to produce is the front wheels. The front wheels allow the dragster to move with very little friction. While they are an important part of the vehicle, they can also be decorative, incorporating creative as well as functional design.

In Inventor, use the revolve tool to get the basic shape of the wheel and the groove for the tire. Next, make new sketches and extrude them to make the hub and recesses and any weight relief or decorative features. After, use the hole tool to make a concentric hole for the shaft. Finally, make a sketch and extrude a hole through the hub for the set screw. Fillets and chamfers can also be added if desired.

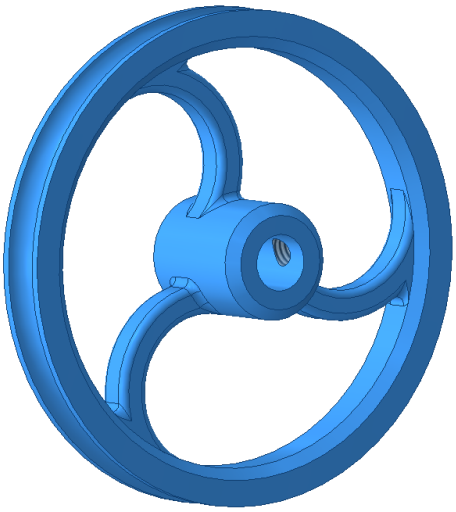

A good front wheel will be well balanced and light, but also strong enough to support the car and any shocks it may encounter.

The front wheels have the following requirements:

-Groove for a rubber 'tire' 37mm interior diameter and 3mm wide
-Hole for a 4mm shaft
-Hub for support, and optionally, hole for 3mm set screw

Front Wheels

Beta bots alpha

Your Turn

Make a drawing of the front assembly of your dragster.

Label the different components.

Make a drawing of your front wheel.

Describe the design for your front wheel. What makes it special?

_____

_____

_____

_____

_____

_____

_____

_____

Frame

βετα bots alpha

The next step in the dragster design is the frame. The frame is the structure of the vehicle, it is where everything attaches to. Two identical frame plates will be attached together with threaded standoffs. The frame determines much of the overall look of the dragster, and can have a profile which reflects the team's creativity and attitude.

The frame is made beginning with a 2D sketch. It's easiest to start with a rectangle containing the important features, and extrude that to make a plate with the basic shape. Start another 2D sketch on the plate and draw shapes to cut away parts of the plate. The dragster can be curvy or angular, short or tall, approachable or mean looking.

The frame has the following requirements:

-7mm hole to mount the front wheel bushings
-39mm hole for motor clearance
-Clearance holes for M3 screws for motor plate mounting
-1.125" hole for rear bearing
-3 clearance holes for M4 screws for standoffs

Frame

βετα bots alpha

Your Turn

Make a sketch of the frame for your dragster.

Label the different features. The front and rear wheels are included.

Fill in the number of each hole used in your frame:

M3 clearance holes: _____

M4 clearance holes: _____

7mm holes: _____

20mm holes: _____

39mm holes: _____

Describe the look of your frame. What are its characteristics?

_____

_____

_____

_____

_____

_____

_____

_____

Rear Pulley

βετα bots alpha

The last part to be designed on the dragster is the rear pulley. The rear pulley transfers the torque from the gearbox to the wheels. There will only be one rear pulley, since there is only a single gearbox on the dragster.

Like the front wheels, a revolution can be used to make the basic profile, and subsequent operations can be used for additional features. The polygon tool can be used to make the hexagon in the middle of the pulley.

A well designed rear pulley will be light, but strong enough to resist the torque coming from the gearbox. The groove on the pulley should also be able to grip the round belt well, without adding unnecessary friction to the drive train. Finally, the size of the pulley can play an important role in

The rear pulley has the following requirements:

-Hole for 0.5” hexagonal shaft in the middle
-Groove for ⅛” round belt

Rear Pulley

Your Turn

Make a drawing of the rear assembly of your dragster.

Label the different components.

Make a sketch of your rear pulley.

Describe the look of your pulley.
What are its characteristics?

_____

_____

_____

_____

_____

_____

_____

_____

CAD Assembly

βετα bots alpha

Now that all the custom components are complete, it's time to assemble everything into the final assembly. Every part should be included in the assembly, down to the fasteners.

The first part placed in the assembly should be the frame. The first frame component should be placed grounded at the origin. Other components are constrained to the frame, with enough constraints added so that the part will move in the same way as the final vehicle. Often, it is necessary to add several constraints to a part in order to achieve this. Many different constraints exist, and the right one should be chosen according to what is required.

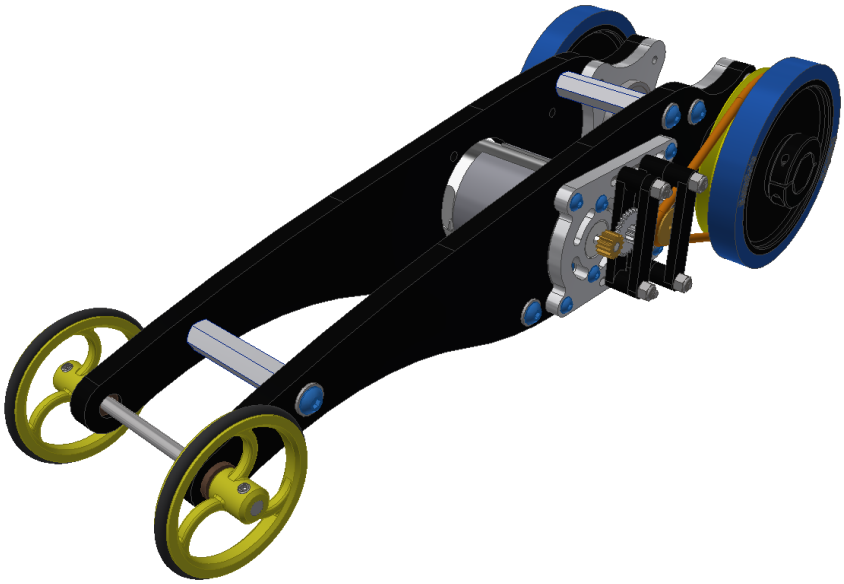

Once all the parts are assembled, look closely at the model to see if any parts require modification. It's very easy to change a part in an assembly, simply double click it, apply the modification and press the 'return' button at the top right of the screen.

Make sure that:

-All components are included in the assembly, including fasteners
-All components have correct constraints applied to them
-No components interfere with one another

CAD Assembly

Beta bots alpha

Your Turn

Make a list of all the components used in the dragster assembly.

Indicate how many of each were used.

Describe two kinds of constraint used in the assembly. Illustrate them with a simple sketch.

What were some of the challenges when assembling the dragster? Did any components need to be changed? If so, why and how?

_____

_____

_____

_____

_____

_____

_____

_____

Cut Frame

Once the dragster has been assembled in Inventor and the design is finalized, it's time to prepare the frame for laser cutting. This requires the part to be in a format the laser cutters can understand.

A 1:1 model must be created for the cutting machine to understand, as well as a drawing with relevant dimensions and information, for a human to understand. This information includes the name of the part, the scale, important dimensions, the units used in the drawing, the type of material used as well as the material's thickness.

Making the file for the machine is very easy. Simply open the part in Inventor, right click the face and click 'Export Face As…' In the menu, choose AutoCAD DXF, give the part a descriptive name and save the file in a folder specifically for drawings.

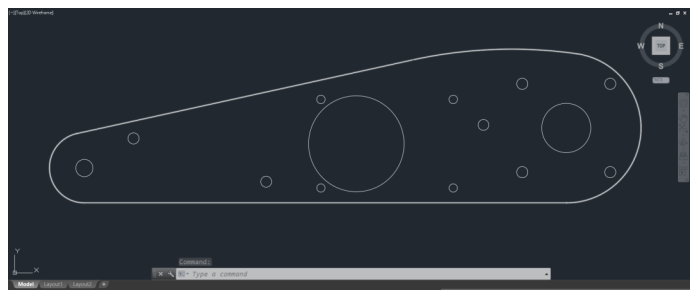

.DXF File of Frame (opened in AutoCAD)

Next, start a new drawing file in Inventor. Place a base view of the part to be cut. Next, add some dimensions. The most important dimensions are the overall length and height. Make sure all of the information in the title block is filled out, and that the team name is included on the drawing. Finally, export the document as a PDF. Put it in the same folder as the DXF file that was just created, and give it the same name.

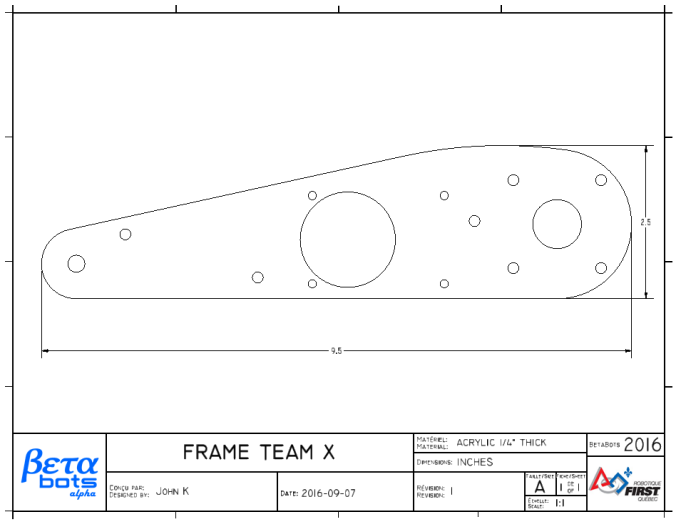

Drawing of Frame

robotiquefirstquebec.org

Cut Frame

Your Turn

Use this checklist to ensure that all steps are completed.

- ☐ DXF file exported from model
- ☐ Part drawing created including important dimensions
- ☐ All information filled out in title block
- ☐ Team name included in drawing
- ☐ PDF of drawing created
- ☐ Team name included in file name
- ☐ DXF and PDF files have same name

3D Printing

βετα bots alpha

In order for the front wheels and rear pulley to be printed, they must be in a format the 3D printer can understand. This format is .STL. It's very easy to export an STL file in Inventor, but first, the file must be prepared to ensure it prints properly.

When 3D printing, the orientation of the part is important. Since 3D printers use layers of material, the orientation influences the strength of the part. When printing wheels, the layers should be made as circles, so the wheels are printed perfectly round. If the wheel were oriented a different way, it would be stepped and would not roll as well. When 3D printing, the Z axis is the vertical axis.

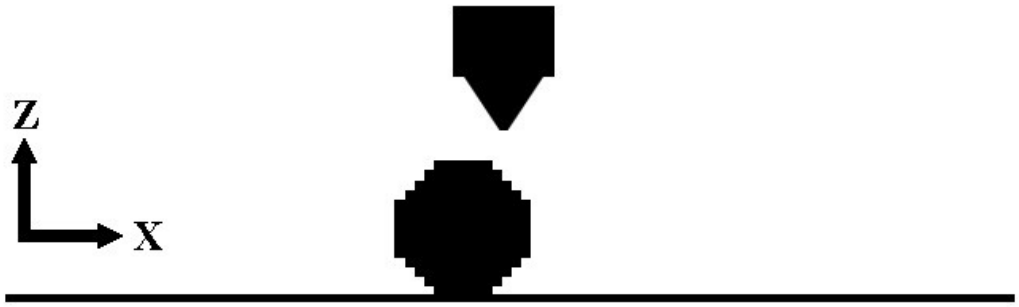

Badly oriented wheel on 3D printer

Multiple parts can be exported as a single file to be 3D printed. To do this, insert the parts in an assembly. Place the first part and rotate it until the Z axis is the vertical one, then place the part grounded at the origin. Place the next parts and constrain them to the first part, such that they share a common ground plane. When the parts to be printed are placed, put the parts close together so as not to waste space on the 3D printer. Choose the print option in Inventor, and click 'Send to 3D Print Service'. In the options menu, make sure the units are in millimetres. Save the file with the team name included.

3D Printing

Your Turn

Describe the process of 3D printing. What are some of its advantages and disadvantages?

_____

_____

_____

_____

Why is the orientation of a part important on a 3D printer?

_____

_____

_____

_____

Why should multiple parts share a common ground plane when 3D printing? What would happen if they didn't?

_____

_____

_____

Assemble

βετα bots alpha

If the 3D design is complete, the physical assembly of the dragster should be straightforward. Parts should fit together easily, without the need to use force.

A printout of the assembled dragster can greatly help with assembly. This can refresh the team's memory of the placement of various components.

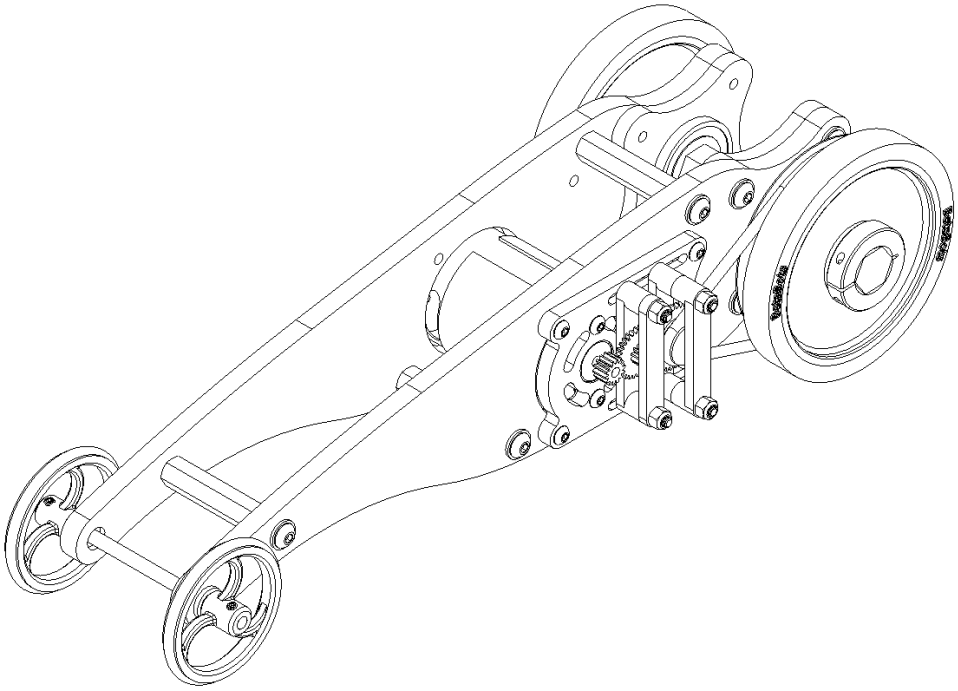

Be sure to use the right tool for any given application. The hex shaft collars use imperial hex keys, while the rest of the dragster uses metric ones. Using a metric key in an imperial screw (and vice versa) can damage both the key and the screw.

If the side plates are made of acrylic, keep in mind that over tightening screws can cause them to crack. Always use a washer on fasteners touching acrylic to minimize this risk.

Assemble

βετα bots alpha

Your Turn

Why is it important to use the right tool for a given application?

_____

_____

_____

What tools were required for the assembly of the dragster?

_____

_____

_____

Describe the assembly process. What were some of the challenges the team faced?

_____

_____

_____

_____

_____

Test Ratios

βετα bots alpha

Now is the time to test different ratios in the gearbox to optimize its speed. A high reduction increases the torque of the motor, but sacrifices its speed. This gives the dragster very good acceleration, but a low top speed. A low reduction gives the dragster a high top speed, but poor acceleration. There is always a trade-off between acceleration and top speed. An optimal ratio is a compromise between the two. The best ratio for one dragster may not be the same for another.

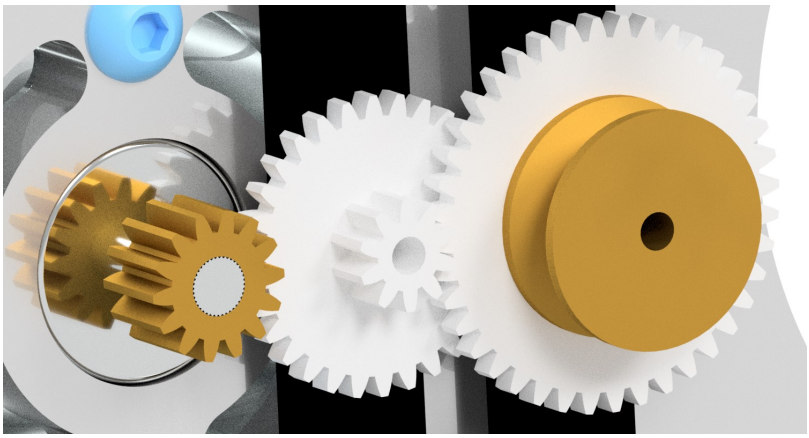

The only way to find out the best ratio for a particular dragster is to test. Change the gears, calculate the ratio and record the dragster's speed. Do this for multiple ratios, and graph the results to find the best ratio for the dragster.

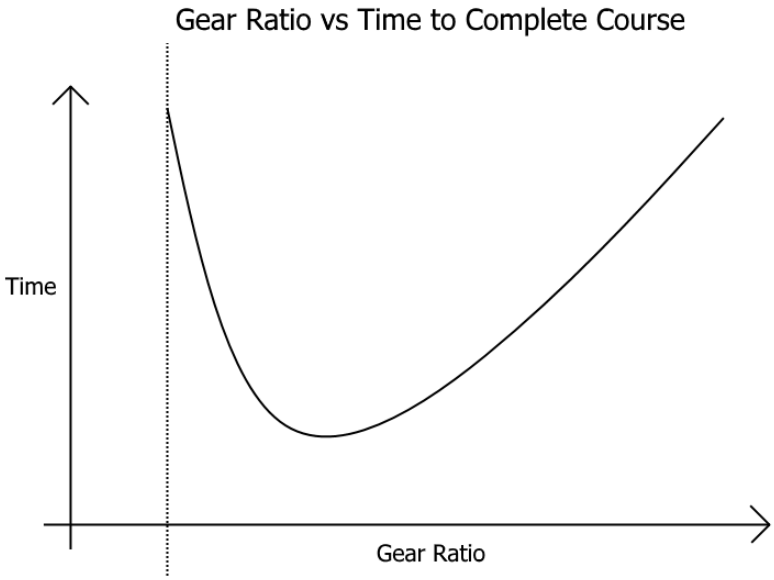

The example graph shows the relationship between the gear ratio and the time to finish a particular course. Note that below a certain ratio, there is not enough torque, and the dragster does not move at all. The optimal ratio has the dragster complete the course in the least time. This ratio would not necessarily be

Test Ratios

βετα bots alpha

Your Turn

Explain what a gear ratio is and what it's used for.

_____

_____

_____

Calculate an example gear ratio. Sketch the gears used.

Why would different dragsters have different optimal gear ratios?

_____

_____

_____

If the race course were longer, how should the ratio be changed? Why?
What if the race were shorter?

_____

_____

_____

Race

The race day is when the fastest dragster is determined. First, there will be qualifying matches, where teams will be ranked. Next, playoff matches are played to determine a winner.

During the competition, it may be necessary to repair the dragster between runs. Understand that taking too long for a repair may cause the team to miss a match.

Race

Your Turn

How did your team perform?

_____

_____

_____

Could your team have improved its performance? How?

_____

_____

_____

If you were to participate again, what would you change and why?

_____

_____

_____

_____